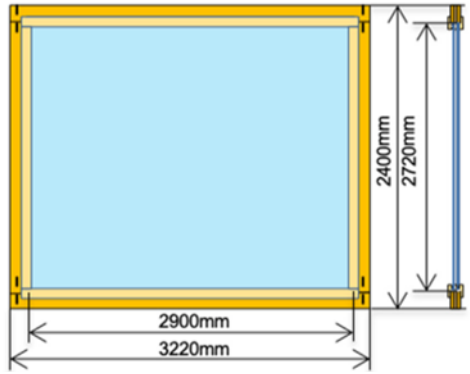
2400mm
2720mm
2900mm
3220mm

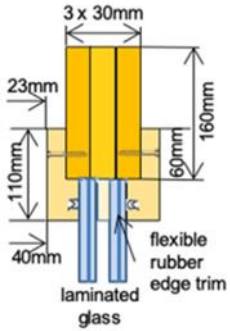
3 x 30mm
23mm
160mm
110mm
60mm
40mm
flexible
rubber
edge trim
laminated
glass

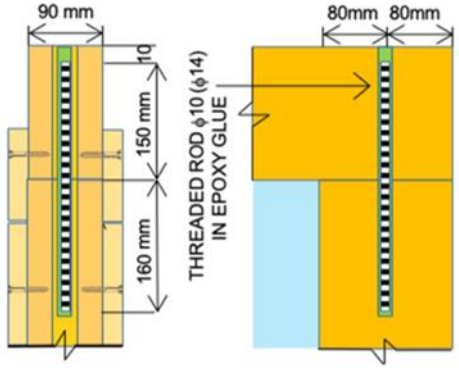
90 mm
10
150 mm
160 mm
THREADED ROD ϕ10 (ϕ14)
IN EPOXY GLUE
80mm 80mm

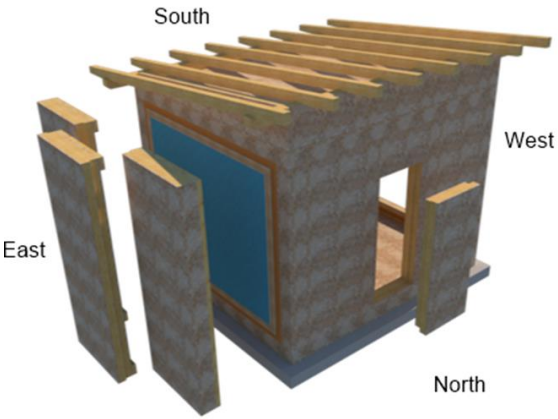
South
West
East
North

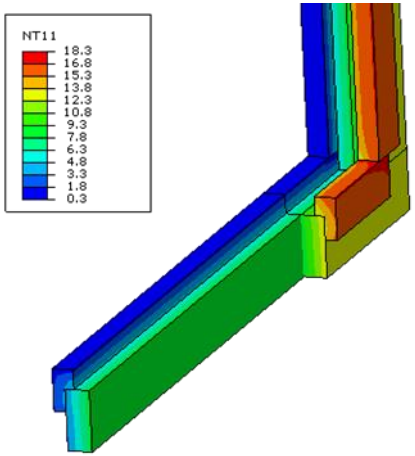
NT11
18.3
16.8
15.3
13.8
12.3
10.8
9.3
7.8
6.3
4.8
3.3
1.8
0.3

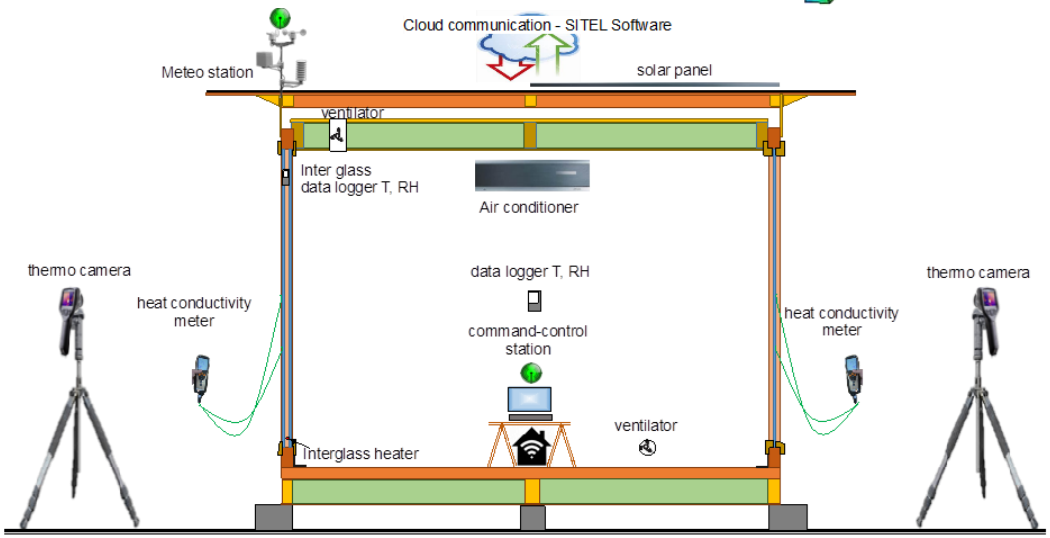
Cloud communication - SITEL Software
Meteo station
solar panel
ventilator
Inter glass
data logger T, RH
Air conditioner
thermo camera
heat conductivity
meter
data logger T, RH
command-control
station
heat conductivity
meter
thermo camera
ventilator
Interglass heater

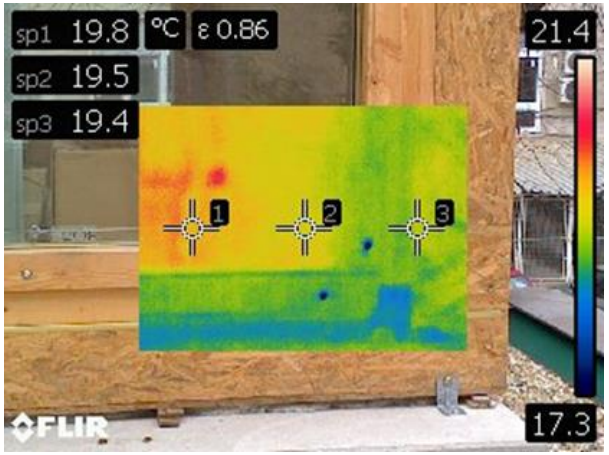
sp1 19.8 °C ε 0.86
sp2 19.5
sp3 19.4
21.4
17.3
1
2
3
FLIR